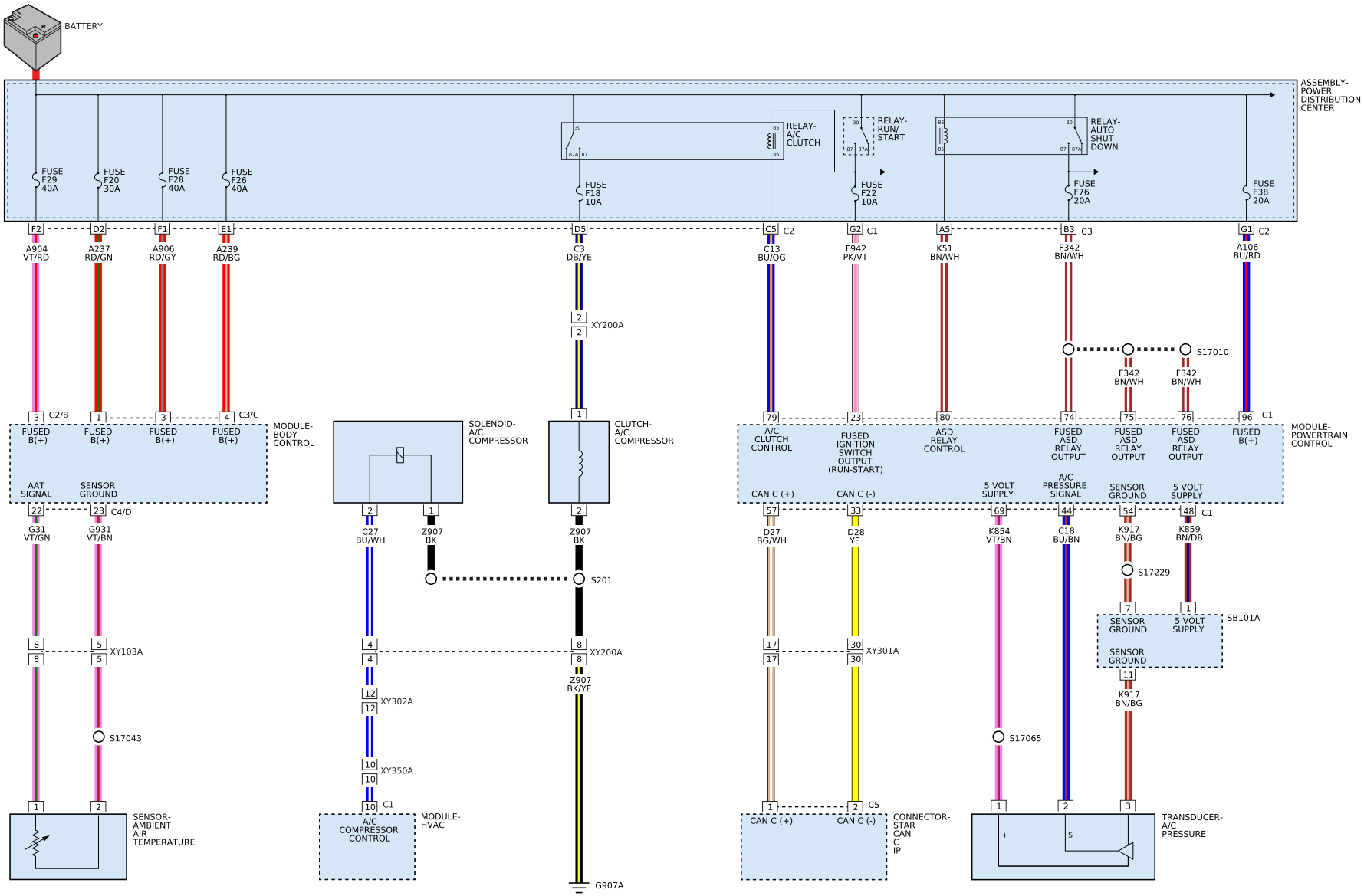A/C CONTROL SYSTEM - 3.6L