HVAC SYSTEM - ATC

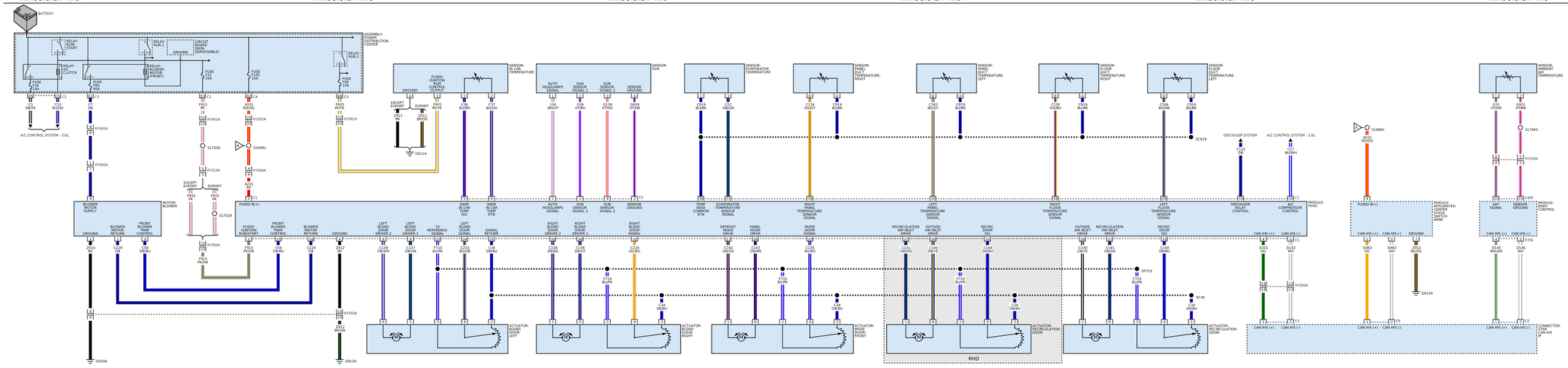

HVAC SYSTEM - ATC

HVAC SYSTEM - ATC

HVAC SYSTEM - ATC

HVAC SYSTEM - ATC

HVAC SYSTEM - ATC